Valve Specialists

INDUSTRIAL VALVE AND AUTOMATION SPECIALISTS

STRAIGHT-THROUGH TYPE KB DIAPHRAGM VALVES

Straight-Through Type KB Diaphragm Valves

THE ORIGINAL AND THE BEST

PK Saunders invented the original diaphragm valve in 1928 in the then known West Rand gold fields of Johannesburg. Since then, we have developed our range through innovative designs and by using the latest materials technology. As a result, Saunders diaphragm valves have gained an excellent reputation for versatility and reliability establishing a presence in the mining and every process industry sector. Today there are millions of Saunders diaphragm valves, manufactured by Dynamic Fluid Control and supplied by our distribution partners to South and Southern African markets.

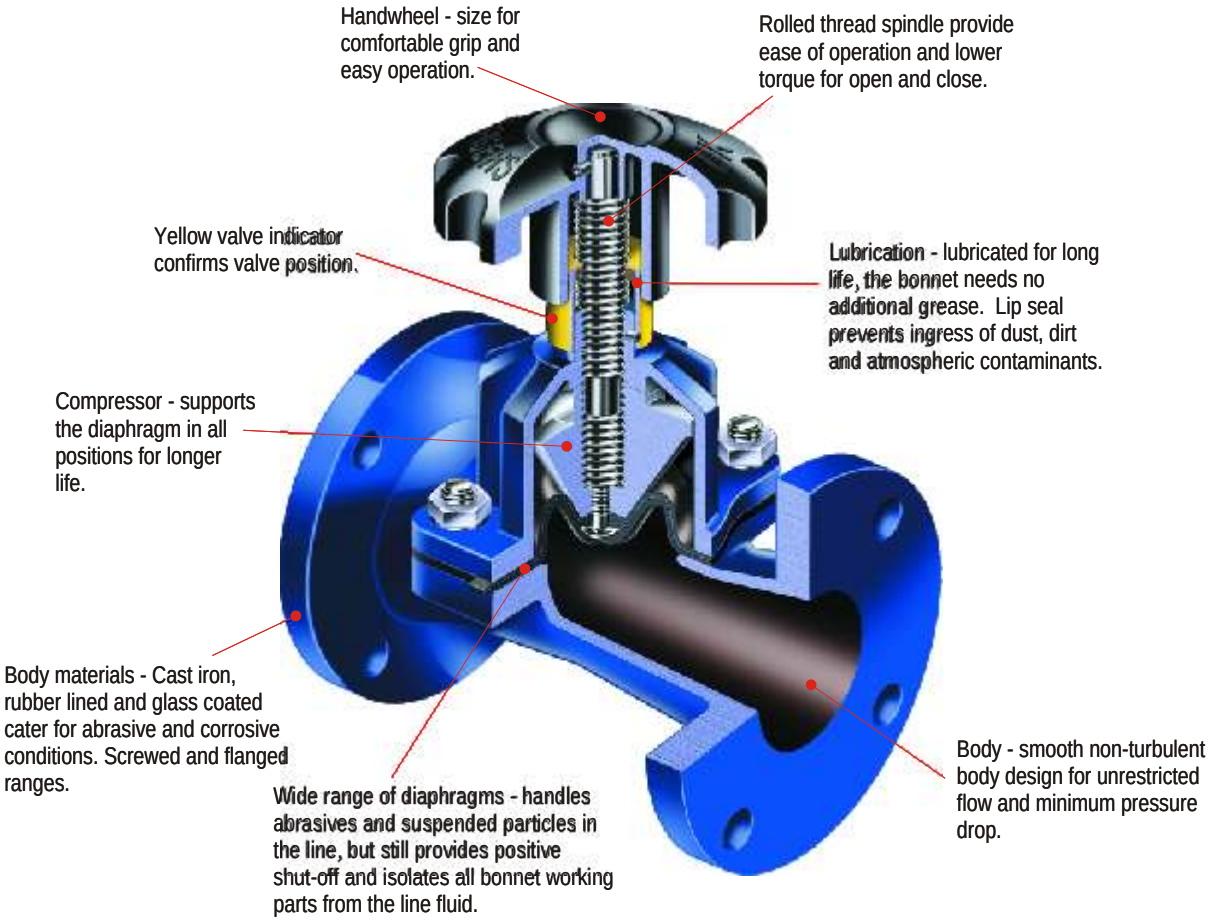

STRAIGHT THROUGH BORES	
Saunders full bore KB type valve, with their smooth non-turbulent body design have proved to be outstanding in resisting the erosive affects of corrosive/abrasive line media. In addition, the full bore concept is designed for minimum flow resistance whilst allowing rodding out and easy cleaning. The flexible diaphragms ensure consistent leak tightness even when solids, powders and dry media are present. A range of rubber linings are available for the more exacting corrosive and abrasive applications to a maximum working pressure of 10 bar.	
VALVE USABLE IN ANY POSITION	LUBRICATION
The KB valve can be installed in any position without affecting its operation. We recommend six times pipe diameter from pump or bend.	Bonnet assembly lubricated for long life. Needs no further grease. The indicator lip seal stops the ingress of dust, dirt and atmospheric contaminates.
EASE OF MAINTENANCE	
Three part design allows maintenance and actuator retrofitting without removing the valve body from the pipeline. Extended life, reliability and safety, combined with essentially simple design, result in low maintenance and low cost of ownership.	

Valve Specialists
INDUSTRIAL VALVE AND AUTOMATION SPECIALISTS

SAUNDERS KB TYPE DESIGN WITH RHI BONNET

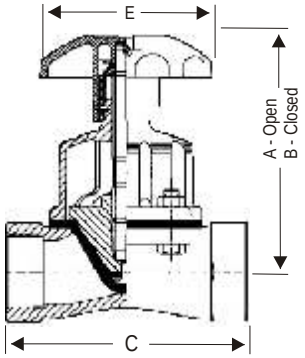

Screwed DN15 - DN50

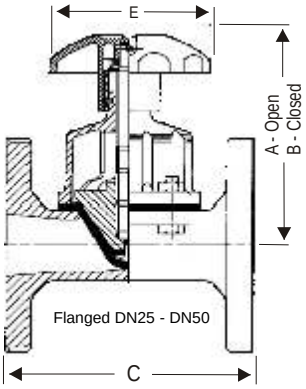

RHI (Rising Handwheel Indicator)

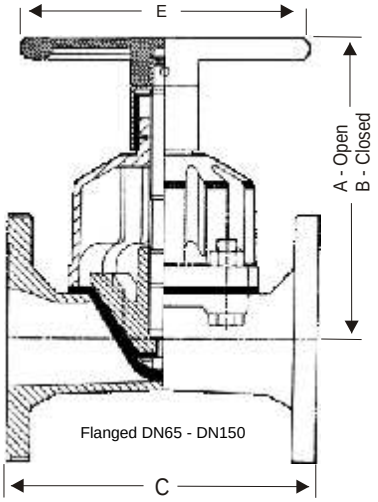

C'
(Rubber Lined)

Non - Rising Handwheel

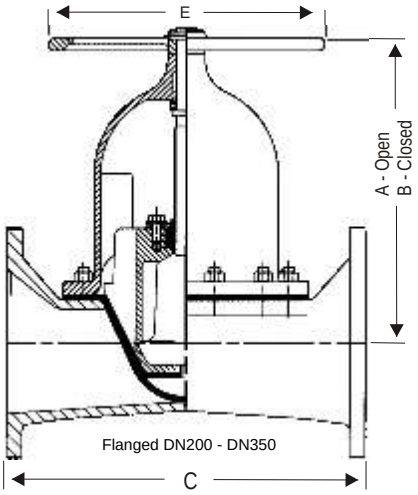

C'
(Rubber Lined)

FEATURES AND BENEFITS OF THE KB BODY WITH RHI BONNET	
* Straight through body, high flow, low pressure drop	* Specially developed linings and diaphragms available
* Low maintenance	* Indicator sleeve (lubrication reservoir)
* Rising handwheel indicator	* Rolled thread spindle
* Immediate indication of open/close position	* More compact than the previous model
* Leak tight by design	* Better resistance to corrosion/abrasion due to the sealed bonnet
* Flexible closure even with solids present	* Weighs less for easy handling
* Only two wetted parts	* Space saver for difficult installations
* Bonnet working parts isolated from line media	* Lower open and closing torques

VALVE SIZE - DN															
		15	25	32	40	50	65	80	100	125	150	200	250	300	350
Screwed	A	-	166	166	166	185	-	-	-	-	-	-	-	-	-
	B	-	159	159	159	165	-	-	-	-	-	-	-	-	-
	C	-	111	124	143	168	-	-	-	-	-	-	-	-	-
	Aprox Weight	-	2	3	4	6	-	-	-	-	-	-	-	-	-
Flanged	A	-	163	163	163	185	224	273	321	347	447	-	-	-	-
	B	-	157	157	157	165	200	240	285	305	385	415	560	640	680
	C	108	127	146	159	190	216	254	305	356	406	521	635	749	980
	C'	-	133	152	165	196	222	260	310	362	412	527	641	755	986
	Aprox Weight	2	4	5	6	11	15	23	31	46	67	110	200	300	400
	E	80	120	120	120	120	200	250	250	315	400	400	500	630	720
Operating Pressure - bar		10	10	10	10	10	10	10	10	6	6	3.5	3.5	3.5	1.5

Weights in Kg. C valve length = EN 558-1 Series 7 (ex BS 5156)

Valve Specialists
INDUSTRIAL VALVE AND AUTOMATION SPECIALISTS

A VALVE PACKAGE FOR CORROSIVE AND ABRASIVE APPLICATIONS

GUIDE TO BODY (LININGS) APPLICATIONS		RANGE AVAILABILITY	
BODY / LINING	**TYPICAL APPLICATIONS**	**SIZE**	**TEMP °C**
Cast Iron Ductile Iron (SG)	Strength, low cost non corrosive duties	DN15-DN350	-20° to 175°
Rubbers - Soft (AAL) - Hard (Ebonite) (HRL) - Butyl (BL) - Neoprene (NL)	Economic handling of corrosive & abrasive media Abrasive duties Acid, chlorinated water, moist chlorine Mineral acids, & slurries Abrasive duties where hydrocarbons are present	DN25 - DN350	 -10° to 85° -10° to 85° -10° to 110° -10° to 105°
Borosilicate Glass	Excellent for strong acids, halogens	DN25 - DN200	-10° to 175°
Halar"	Excellent resistance to mineral and oxidising acids inorganic bases, salts	DN25 - DN350	-10° to 150°
Fusion Bonded Epoxy FBE	Potable water applications	DN25 - DN350	-20° to 80°

Halar™ is the registered trademark of AUSIMONT UK Ltd

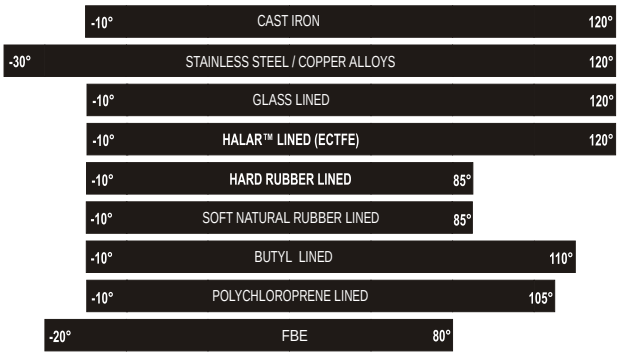

SAUNDERS DIAPHRAGMS VALVES - A UNIQUE DESIGN, SEALED FROM THE SERVICE AND PROOFED AGAINST CORROSION AND EROSION IN HOSTILE ENVIRONMENTS

GUIDE TO DIAPHRAGM APPLICATIONS		RANGE AVAILABILITY	
GRADE	**TYPICAL APPLICATIONS †**	**SIZE**	**TEMP °C**
A	Abrasives in slurry or dry powder form.	DN15 - DN350	- 40° to 90°
B	Acid and alkalis. Up to 85% sulphuric acid at ambient temperatures. Hydraulic hydrochloric phosphoric acids, caustic alkalis and many esters. Sea water, very low vapour and gas permeability. Insert gases and many industrial gases.	DN15 - DN350	- 30° to 90°
C	Salts in water, dilute acids and alkalis, abrasives.	DN15 - DN350	- 10° to 90°
226	Paraffinic and aromatic hydrocarbons, acids, particularly concentrated suplhuric and chlorine applications. Not recommended for ammonia and its derivatives or for polar solvents, e.g. acetone.	DN15 - DN250	- 5° to 140°
237	Good acid and ozone resistance certain chlorine services.	DN15 - DN350	- 0° to 90°
300	For hot water services applications involving steam sterilisations, therefore, ideally suited for brewing and pharmaceutical applications. For services involving continuous high temperature/pressure combinations consult our technical department.	DN15 - DN350	- 20° to 120°
425	Salts in water, drinking water.	DN15 - DN350	- 40° to 100°

Key to grade letters / materials

A - Natural Rubber
B - Butyl
C - Nitrile

226 - Fluororubber
300 - Butyl

237 - Hypalon
425 - Epdm

Printed July 2005